MOVA

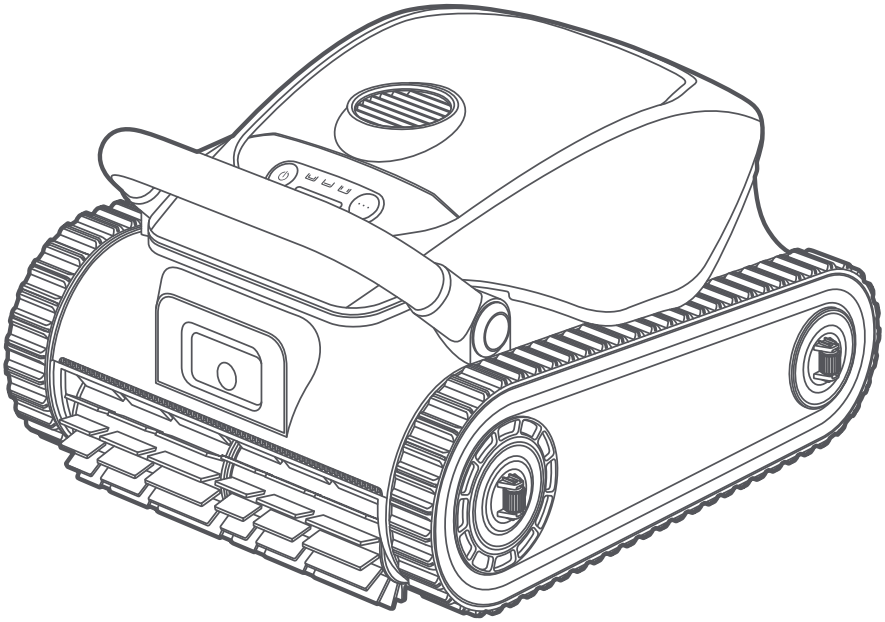

Robotic Pool Cleaner

MOVA Diver A10

User Manual

The illustrations in this manual are for reference only. Please refer to the actual product for accuracy.

1. Safety Instructions

- Always disconnect the appliance from the supply before assembling, disassembling or cleaning.
- To protect against the effect of freezing, the appliance shall not be left outside during freezing weather conditions.
- The appliance is a Class III appliance that it must only be supplied at SELV.

1.1 Safety Regulations

- **READ AND FOLLOW ALL INSTRUCTIONS.**
- **SAVE THESE INSTRUCTIONS.**
- Remove the robotic pool cleaner from the pool before allowing people to enter the pool.
- When examining the robotic pool cleaner, make sure the robotic pool cleaner is switched OFF.
- Charge the battery only in the temperature range between 5°C to 45°C / 41°F to 113°F.
- Appliances can be used by persons with reduced physical, sensory or mental capabilities or lack of experience and knowledge if they have been given supervision or instruction concerning use of the appliance in a safe way and if they understand the hazards involved. Children shall not play with the appliance.
- The unit must be connected only to a supply circuit that is protected by a ground-fault circuit interrupter (GFCI). This GFCI should be tested on a routine basis. To test the GFCI, push the test button. The GFCI should interrupt power. Push the reset button. Power should be restored. If the GFCI fails to operate in this manner, the GFCI is defective. If the GFCI interrupts power to the power unit without the test button being pushed, a ground current may be flowing, indicating the possibility of an electric shock. Do not use the power unit. Disconnect the power unit and contact the manufacturer for assistance.
- Use only the original battery charger.
- The battery charger must be supplied through a residual current device (RCD) having a rated residual operating current not exceeding 30mA.
- The power cord is not user-replaceable. If the power cord is damaged, stop using the battery charger and contact the service center for repair. Do not use extension cord to connect the battery charger to electric supply; provide a properly located outlet.

- DO NOT USE the robotic pool cleaner and/or its battery / power pack in case of mechanical damage to the robotic pool cleaner and/or its battery.
- To avoid the risk of fire and burns, DO NOT open, crush, heat, or burn the battery case.
- Keep hands and fingers away from impeller motor area and driving belt mechanism to avoid injury.
- Position the battery charger at least 3.5 m / 11.48 ft from pool edge during operation.
- For continuous protection against possible electric shock, place the battery charger at least 11 cm / 4.33 in above ground.
- When lifting the robotic pool cleaner, take care to prevent back injury.
- Do not use the robotic pool cleaner if you have added liquid flocculant or any other clarifier to the pool water. These substances obstruct and damage the robot's filters.
- The Lithium-Ion battery in this product is non-replaceable. It should be recycled at certified battery electronics recyclers that accept batteries. Batteries should NOT be discarded in the trash or put in municipal recycling bins. Do not disassemble the battery.
- The robotic pool cleaner must not be used when people are in the water.
- Switch off the pump from the supply mains before carrying out user maintenance such as cleaning the filter.
- Only use the supply unit provided with this appliance.

1.2 IMPORTANT SAFETY INSTRUCTIONS

When installing and using this electrical equipment, basic safety precautions should always be followed including the following:

- **READ AND FOLLOW ALLINSTRUCTIONS.**
- **This appliance shall not be used by children. Cleaning and user maintenance shall not be carried out by children.**
- Prevent unintentional starting. Ensure the switch is in the off position before connecting to battery pack, picking up or carrying the appliance. Carrying the appliance with your finger on the switch or energizing appliance that have the switch on invites accidents.
- Recharge only with the charger specified by the manufacturer. A charger that is suitable for one type of battery pack may create a risk of fire when used with another battery pack.
- Use appliances only with specifically designated battery packs. Use of

any other battery packs may create a risk of injury and fire.

- When battery pack is not in use, keep it away from other metal objects, like paper clips, coins, keys, nails, screws or other small metal objects, that can make a connection from one terminal to another. Shorting the battery terminals together may cause burns or a fire.
- Under abusive conditions, liquid may be ejected from the battery. If contact accidentally occurs, flush with water. If liquid contacts eyes, additionally seek medical help. Liquid ejected from the battery may cause irritation or burns. (This advice is considered correct for conventional NiMh, NiCd, lead acid and lithium-ion cell types. If this advice is incorrect for a cell design that differs from these, then the correct advice may be substituted.)
- Do not use a battery pack or appliance that is damaged or modified. Damaged or modified batteries may exhibit unpredictable behavior resulting in fire, explosion or risk of injury.
- Do not expose a battery pack or appliance to fire or excessive temperature. Exposure to fire or temperature above 130° C may cause explosion. The temperature of 130° C can be replaced by the temperature of 265 ° F.
- Follow all charging instructions and do not charge the battery pack or appliance outside of the temperature range specified in the instructions. Charging improperly or at temperatures outside of the specified range may damage the battery and increase the risk of fire.
- It is recommended to charge the robot in a cool, dry indoor environment. Charging under direct sunlight outdoors may cause the robot to overheat, triggering temperature protection and resulting in an inability to charge properly.
- Have servicing performed by a qualified repair person using only identical replacement parts. This will ensure that the safety of the product is maintained.
- Do not modify or attempt to repair the appliance or the battery pack (as applicable) except as indicated in the instructions for use and care.
- Do not expose the appliance or battery to excessive temperatures.
- Be aware of the risk of terminals of the battery or terminals of the adapter being short circuited by metal objects.
- The button cell battery on the MCU must not be replaced by the consumer.

1.3 Correct Disposal of this Product

This marking indicates that this product should not be disposed of with other household waste throughout the EU. To prevent possible harm to the environment or human health from uncontrolled waste disposal, recycle it responsibly to promote the sustainable reuse of material resources. To recycle your used device, please use the return and collection systems or contact the retailer where the product was purchased. They can safely recycle this product.

The remote surveillance is for the absolute private use of non-public, private owned places for the pure self-protection and single control intended only. Please be aware of the local data protection based legal obligations in case of use. No surveillance of public places, especially with clandestine intent and on the part of the employer without justified reasons. Such not justified use is in the risk and responsibility of the user only.

1.4 Symbols and Decals

	Before charging, read the instructions.
	Direct current
	Alternating current
IPX8	IP classification
III	Class III
45°C	Water Temp Max: 45 ° C/113 ° F
3m	Maximum working depth: 3 m
	WARNING – It is not permitted to dispose of this product as normal household waste. Ensure that the product is recycled in accordance with local legal requirements.

1.5 Water Conditions for Robot Use

Chlorine	10 - 12 PPM
PH	7.0 - 7.8
Temperature	5-45°C (41–113°F)
Salt	Maximum 5500 PPM
Ingress Protection	IPX8 for robotic pool cleaner

2. Product Introduction

2.1 What's in the Box

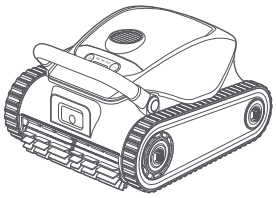

Robot

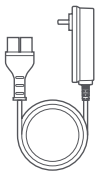

Charger

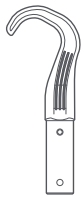

Retrieval Hook

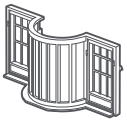

Fine Filter

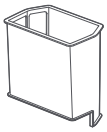

Ultra-fine Filter
(pre-installed)

User Manual and
Quick Start Guide

Note: The illustrations provided in this manual are for reference only. Please refer to the actual product for accuracy.

2.2 Product Structure

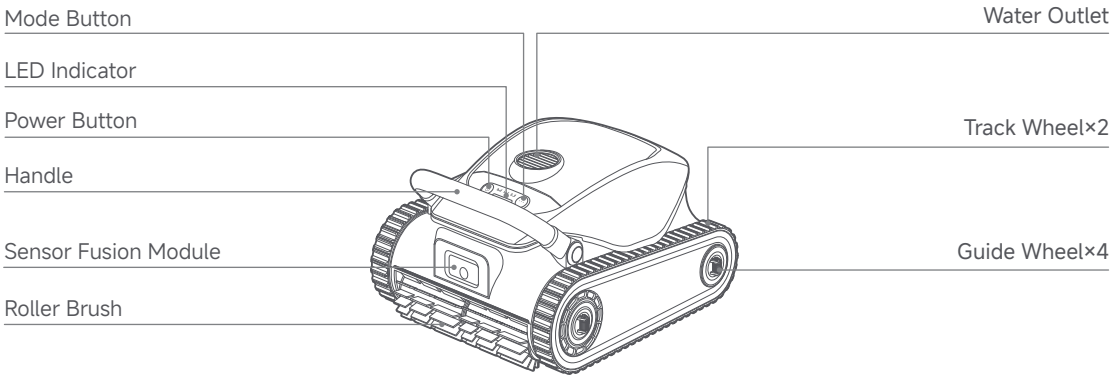

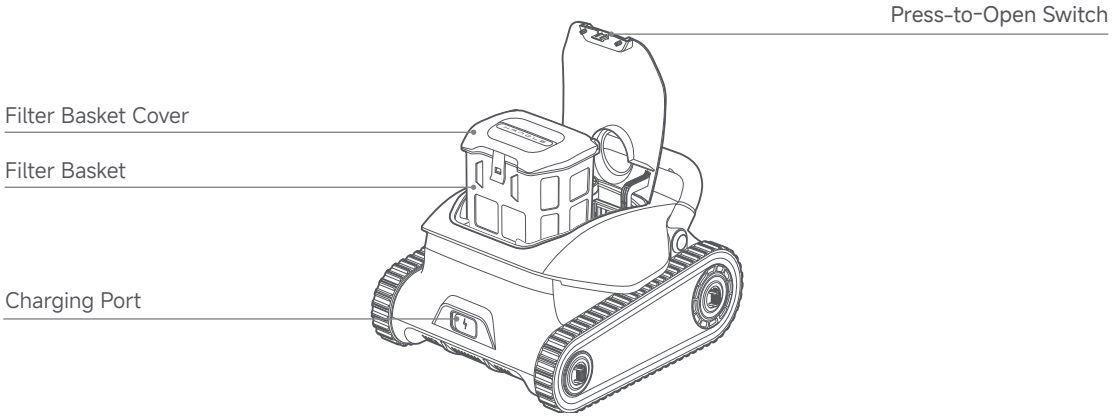

2.3 Controls on the Robot

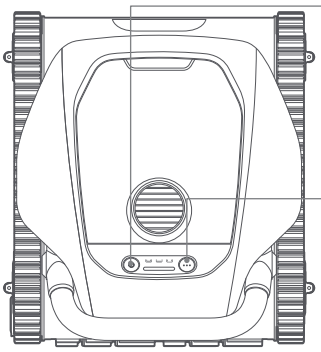

Power

- To turn the robot on or off, press and hold ⏻ for 3 seconds. The LED indicator will blink green to show that the action was successful.
- Press and hold the ⏻ for 10 seconds to force shutdown.

Mode

- Press ··· to choose a cleaning mode from: Floor Only, Wall Only or Complete mode. The indicator below the cleaning mode will light up when the mode is selected.
- To enable the Bluetooth pairing mode, press and hold ··· for 3 seconds. A blinking blue light indicates that the robot is in Bluetooth pairing mode. Press the ··· twice to exit the Bluetooth pairing mode.
- To factory reset the robot, hold ··· and then press ⏻ twice. The indicator light will blink white to show that the robot is restoring the factory settings.

2.4 Status LED

Light Effects		Robot Status
Operation	Breathing Green (On)	Powered on.
	Breathing Green/Orange/Red (Off)	Powered off.
	Solid Green/Orange/Red	Performing tasks underwater.
	Blinking White	Restoring factory settings.
Charging	Solid Green	Battery Level=100%
	Blinking Green	50%≤Battery Level<100%
	Blinking Orange	Battery Level<50%
Error	Blinking Red	An error has occurred.
Hotspot Configuration	Blinking Blue (Rapid)	In Bluetooth pairing mode.
Firmware Update	Colourful Flowing Light	Performing OTA updates.

3. Preparations Before First Time Use

3.1 Charging

Caution:

- Do not charge the robot in direct sunlight.
- Before charging, remove the charging port cover to check if there is any residual water in the charging port. If so, wipe the charging port dry first.

❶ Connect the charging cable to the robot's charging port and plug the charger into an electrical outlet.

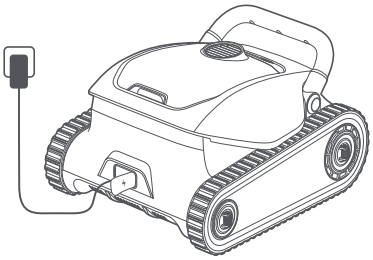

❷ Fully charge the battery, then disconnect the charger. Press and hold ⏻ for 3 seconds to turn on the robot.

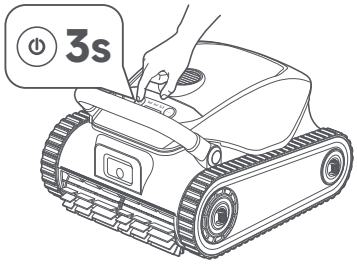

3.2 Install the MOVAhome App

Scan the QR code below to download the MOVAhome app, or search for "MOVAhome" in the App Store or Google Play. After installation is complete, please create an account and log in.

Before setting up the network, please check the following:

- Ensure the robot is turned on.
- Ensure that both your mobile device and the robot are within the same Wi-Fi network coverage range with a strong signal.
- Ensure the current Wi-Fi network is the single-band network of 2.4 GHz frequency or the dual-band network of 2.4/5 GHz frequency.
- Ensure the Bluetooth function on your mobile device is enabled.
- Bring the phone close to the robot (within 1m).

3.3 Get Your Robot Online

❶ Open MOVAhome app.
❷ You can add your robot in one of the following methods:
a. Scan QR code to connect: Navigate to **Device** page and tap **Scan QR code to connect**. Scan the QR code on or inside the robot. Follow the onscreen instructions to complete the connection.
b. Add manually: Go to **Device** page and tap **Add**. Select your robot model. Follow the onscreen instructions to complete the connection.

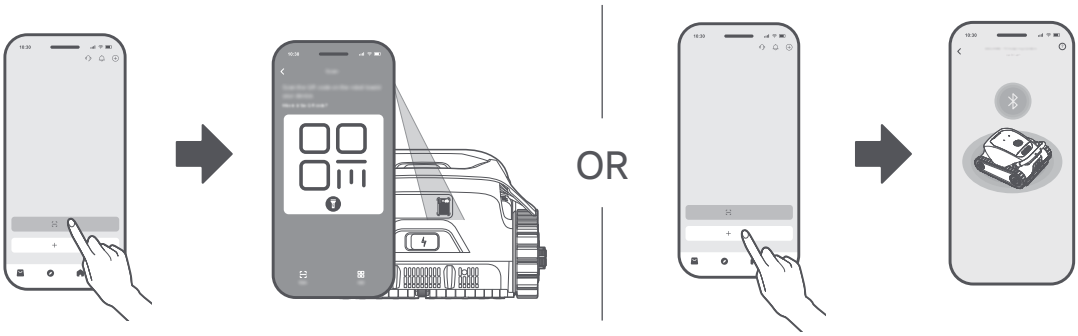

Note: Press and hold ⊙ on the robot for 3 seconds to activate Bluetooth pairing mode. The indicator light will blink blue when the robot is ready to pair.

How to unbind the robot?

The robot is automatically bound to the MOVAhome account once pairing is successful. Each device can only be bound to one account. It cannot be bound to another account at the same time. To pair the robot with a new account, you need to unbind it first. To unbind it:
1. Open the MOVAhome app. Go to 。
2. Locate your robot's name. If you have multiple robots bound to your MOVAhome account, swipe left or right to access the page of the robot you want to edit.
3. Tap ◢ next to the robot's name.
4. Select **Delete**.

How to log out of your MOVAhome account or delete it?

1. Open the MOVAhome app. Go to > Settings > General > Account.
2. Select **Log Out** or **Delete Account**.

How to share your robot?

1. Open the MOVAhome app and go to .
2. If you have multiple robots bound to your MOVAhome account, swipe left or right to access the page of the robot you want to share.
3. Tap ◢ next to the robot's name.
4. Select **Device Sharing**.

Note: The MOVA development team will continuously conduct OTA (Over-the-Air) updates and maintenance on the firmware and app. Please check for update notifications or enable the Auto-update function to keep the firmware and app up-to-date and enjoy more features.

4. Operations

Caution:
- Ensure that no humans or pets are in the pool. Remove any objects from the pool to prevent interference with the robot's operation and to avoid potential damage to the robot.
- Please turn off the pool circulation or heating system before cleaning.

Notes:
- Do not interfere with the robot during underwater operation.
- Ensure the robot is fully charged before use.

4.1 Select Cleaning Mode

The robot can be operated for pool cleaning without a network connection. Set up your cleaning task by pressing the buttons directly on the robot before you submerge it.

Note: Always turn on the robot on a level surface to ensure proper sensor calibration before placing it in the water.

❶ Press and hold ⏻ for 3 seconds to turn on the robot.
❷ Select a cleaning mode by pressing ··· on the robot. The indicator light will turn solid blue below the corresponding icon.

Note: If no mode is selected, the robot will run in Floor Only Mode by default.

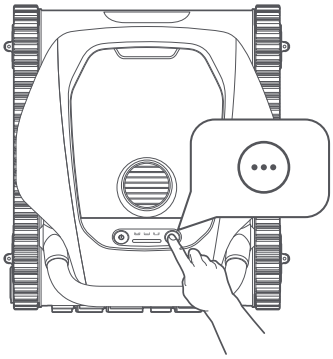

Cleaning Mode	Coverage
Floor Only	Clean the pool floor once until the battery level is low.
Walls Only	Clean the pool walls twice until the battery level is low.
Complete	Clean the pool floor and walls until the battery level is low. The robot continuously moves forward and turns around once it is out of the water.

4.2 Start Cleaning

❶ Submerge the robot in the pool.

Notes:
- The robot will automatically turn off after 10 minutes of inactivity when not in the water.
- The pump motor and track wheels will activate only after the robot lands on the pool floor.
- When placing the robot in the water, keep it at least 20 cm / 7.87 in away from the pool wall to prevent damage.
- Please make sure the charging port cover is securely closed before placing the robot in the pool.

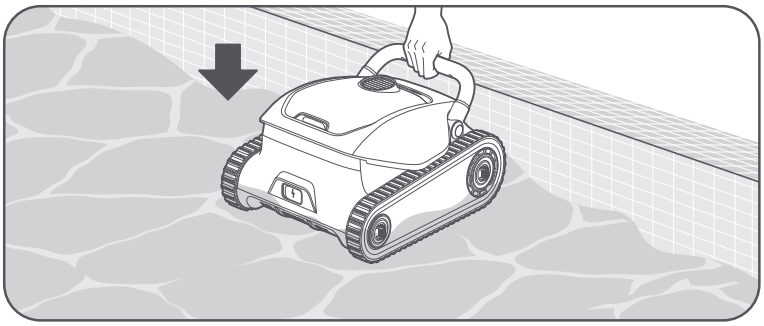

❷ After the robot lands stably on the pool floor, it will perform sensor calibration for 5 seconds. The cleaning cycle will begin as soon as the robot completes the calibration.

Notes:

- If the initial calibration is unsuccessful, the robot will retry.
- Network connections aren't available while the robot is underwater.
- When the robot is working underwater, the camera will be activated for navigation and positioning.

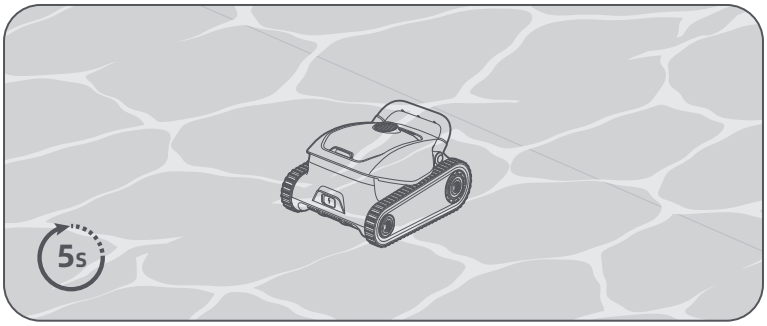

4.3 Cleaning Path

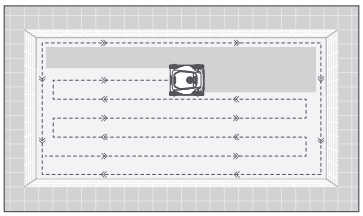

Clean pool floor

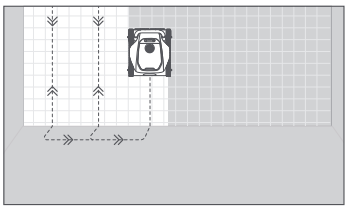

Clean pool wall

4.4 Retrieval

Notes:

- Please be careful when lifting the robot out of the pool, as it becomes heavier when filled with water.
- After each use, please drain any remaining water from the robot and ensure it is completely dry.

When the robot is waiting at the waterline:

❶ Grab the robot by the handle and remove it from water.

❷ The water contained in the robot will be released automatically to make the robot lighter for easier retrieval. If you do not remove the robot within 5 minutes, it will return to the floor near the wall and turn off after a standby period. The auto-parking function can be turned on/off in the MOVAhome App.

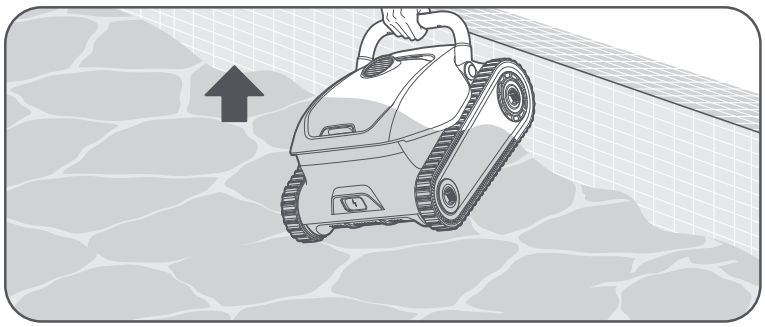

When the robot is waiting on the pool floor:

Note: The robot will automatically climb up the wall and wait at the waterline for 5 minutes when the battery is low (≤10%), an error occurs, or the cleaning cycle is complete. If you do not remove the robot within 5 minutes, it will return to the floor near the wall and turn off after a standby period.

❶ Attach the hook to a standard pool cleaning pole (not included).

❷ Secure the hook onto the robot handle and bring the robot to the waterline.

❸ Pull up the robot by the handle and hold it vertically to allow any remaining water to drain.

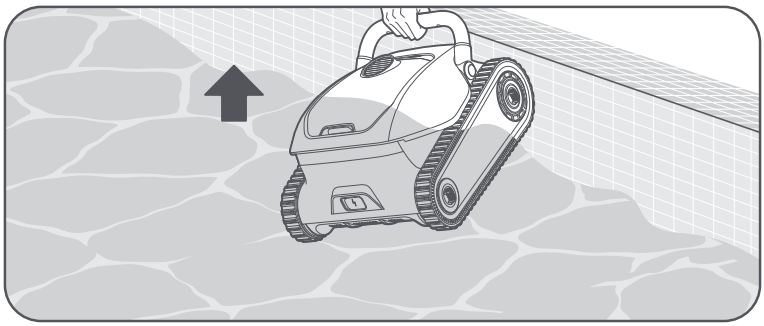

4.5 Data Synchronization Upon Surfacing

When the robot is out of the water and resumes network connections, it will initiate data transmission with the app. This allows you to access detailed information about the cleaning cycle, including the duration, area covered and any issues encountered.

Notes:

- Ensure that both the robot and your phone are in a Wi-Fi environment with a strong signal to enable successful data transmission between the robot and your mobile device.
- Please be aware that the data of the cleaning cycle may be subject to inaccuracies depending on the pool's complexity.

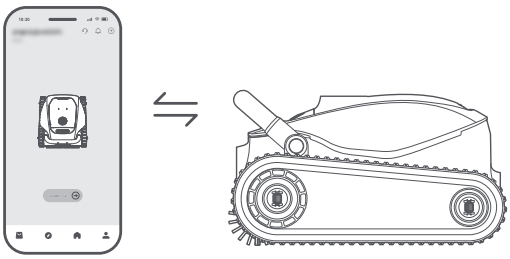

5. Cleaning and Maintenance

Warning: Please turn off the robot before cleaning and maintenance to prevent injury.

5.1 Clean the Filter Assemblies

After each use, it is recommended to rinse the filter basket to prevent clogging. The fine filter shown in the illustrations is used for filtering fine debris. It is optional to use.

❶ Push the filter basket button to open the filter basket cover and take out the filter basket.

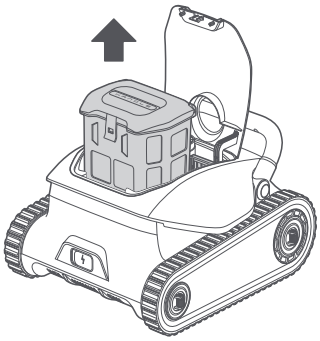

❷ Take out the fine filter.

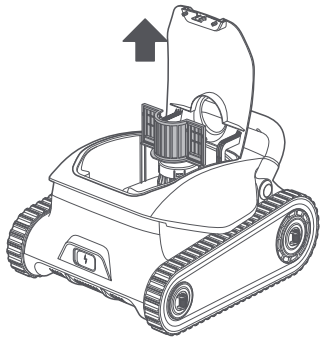

❸ Open the top cover of the filter basket. Empty all debris such as hair, twigs or sand. Separate the ultra-fine filter and the filter basket.

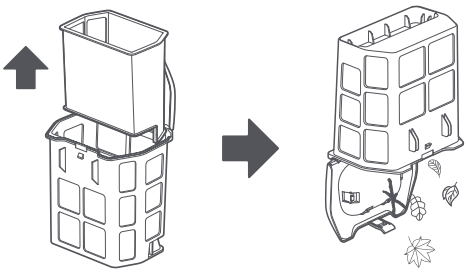

❹ Rinse them thoroughly with a hose.

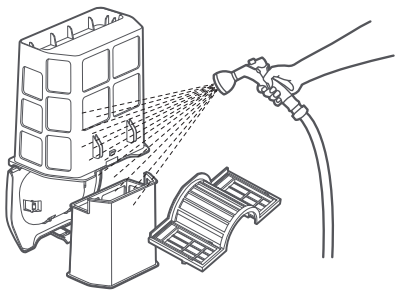

❺ Put them back into the robot.

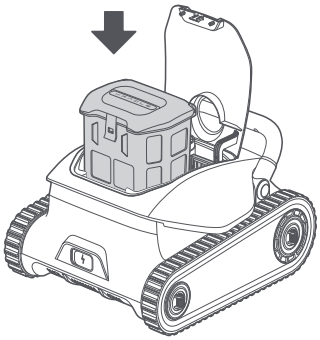

❻ Close the filter cover.

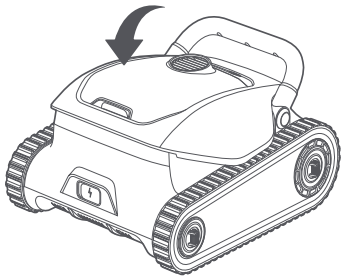

Notes:

- The ultra-fine filter is designed for filtering fine debris like sand, dirt, and certain types of algae.
- It is recommended to clean the ultra-fine filter after each cleaning task.
- The replaceable ultra-fine filter is a consumable item and should be replaced regularly to maintain optimal efficiency.

5.2 Clean the Water Outlet and Roller Brushes

After each use, ensure that the water outlet and roller brushes are free from hair, dirt, and other debris. If necessary, rinse them with a hose. Wipe the charging port and sensors dry after cleaning.

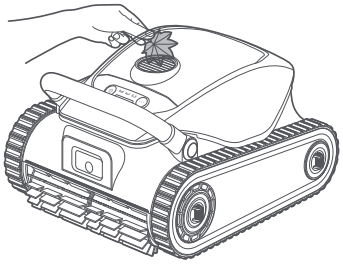

Water Outlet

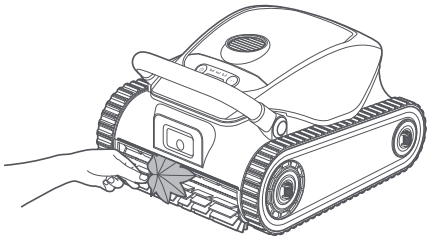

Roller Brushes

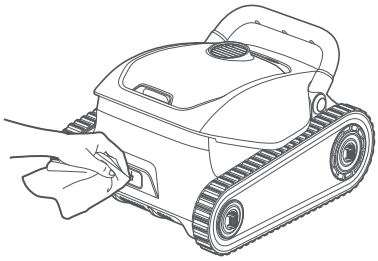

Charging Port

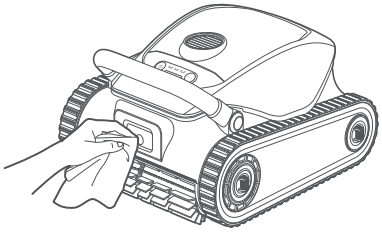

Sensor Fusion Module

5.3 Replace the Roller Brushes and the Tracks

It is recommended to regularly check the condition of the track wheels and the roller brushes, and replace them as needed to ensure optimal cleaning performance. If replacements are necessary, please use the official components.

Replace the roller brushes

❶ Unfasten the silicone buckles on the roller brushes to remove them.

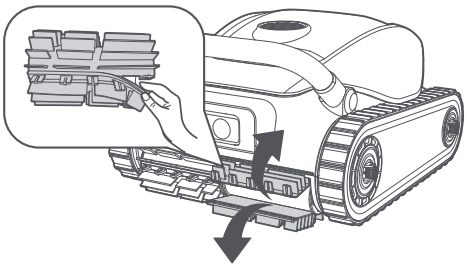

❷ Replace the roller brush with a new one and fasten the silicone buckles.

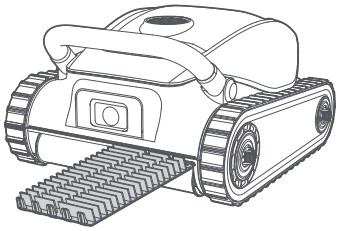

Replace the tracks

❶ Remove the side panel from the robot.

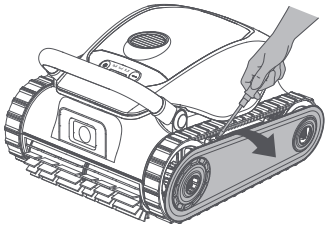

❷ Remove the guide wheel brackets from the wheels.

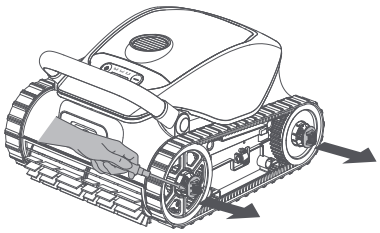

❸ Remove the screws and the wheel retainer.

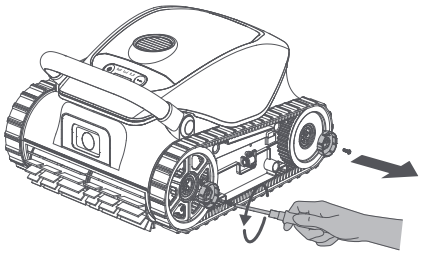

❹ Pull the wheels and the track together to remove them.

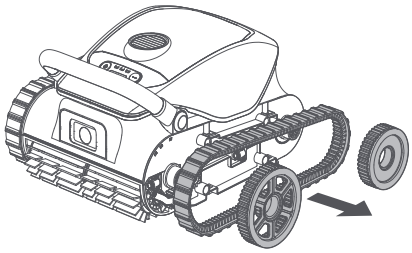

❺ Replace the track with a new one. Reinstall all the components in place.

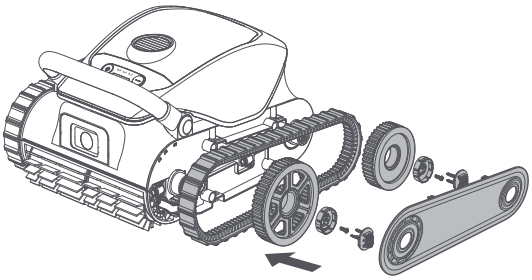

6. Winter Storage and Transport

❶ Remove the robot from the pool and drain all water.
❷ Turn off the robot and disconnect it from the power source before storage. It is recommended to store the robot with a battery level of 80 –100%.
❸ Store the robot in a place with an ambient temperature between -20 °C (-4 °F) and 70 °C (158°F). Ensure the following conditions are met:

- Store the robot indoors in a cool, dry location, protected from direct sunlight, rain, or frost.
- Keep the robot away from extreme temperatures, flames, and areas accessible to children.
- Protect it from dust if stored for an extended period.
- Before using the robot again, please fully charge the battery.

7. Troubleshooting

Issues	Causes	Solutions
The robot fails to connect to the app.	1. The robot is operating underwater. 2. There is an issue with the robot's Wi-Fi or Bluetooth connection. 3. The current Wi-Fi signal is too weak. 4. The robot has not yet been connected to the network.	1. Ensure the robot is not submerged in water. 2. Ensure that the Wi-Fi router is functioning correctly. 3. Move your phone closer to the robot or place the robot nearer to the Wi-Fi router. 4. Refer to the Wi-Fi connection instructions and try again. 5. If the issue persists, please contact after-sales service.
The robot fails to move along the boundary of the pool floor.	1. Sensors may be blocked by debris or fail to function properly. 2. The pool layout is too complex. 3. The robot didn't perform calibration before entering water.	1. Clean all sensors thoroughly and try again. 2. Restart the robot on a level ground and wait for a while for it to calibrate. 3. If the issue persists, contact after-sales service.
The robot fails to stick closely to the pool wall while cleaning the walls.	1. The filter basket may be clogged with debris. 2. The curvature of the wall is too steep.	1. Clean the filter basket thoroughly before trying again. 2.The robot is not designed to navigate pool walls with excessive curvature.
The robot is unable to move or is moving slowly on the pool floor.	1. Sensors may be blocked by dirt or malfunctioning. 2. The filter basket may be clogged with dirt or debris. 3. Debris may be obstructing the drive gears.	1. Clean all sensors thoroughly. 2. Ensure the roller brushes are free from tangles and debris. 3. Try to move the track wheels forward or backward to remove any obstructions between the drive gears.
Charging fails.	1. Excess water residue on the charging port. 2. The charger may be damaged.	1. Dry the charging port thoroughly before attempting to charge again. 2. If the issue persists, please contact after-sales service.
The cleaning results are not as good as expected.	1. The filter basket is full or clogged with debris. 2. Residual debris inside the filter basket compartment is reducing suction power. 3. The suction power of the current cleaning mode may be insufficient. 4. The filter basket's pores are too large to trap fine particles.	1. Promptly clean the filter basket. 2. Use a pressure washer to clean the filter basket compartment and remove any debris. 3. Increase the suction power to a stronger setting and restart the cleaning process. 4. Install the fine filter.

Issues	Causes	Solutions
The robot can't climb up the pool wall.	1. The filter basket is full or clogged with debris. 2. The curvature of the wall is too steep, causing the robot to become stranded.	1. Promptly clean the filter basket. 2. The robot is not designed to navigate pool walls with excessive curvature.
The LED indicator on the robot shows blinking red.	An error is detected.	1. Place the robot on a flat, even surface and restart it. Wait for 30 seconds before submerging the robot again and trying once more. 2. Update the firmware to the latest version and try again. 3. If the issue persists, please contact after-sales service.
The robot is stuck.	The robot is stuck on the pool floor and unable to escape.	Manually retrieve the robot and restart the cleaning cycle.
The robot fails to update.	The Wi-Fi signal is too weak.	Move the robot to an area with a stronger Wi-Fi signal and retry.

8. Specifications

Name	Robotic Pool Cleaner
Brand	MOVA
Model	PIXZ5111
Dimensions (W×L×H)	388.6mm × 221.0mm × 444.5mm
Cleaning Mode	Floor/Wall/Complete
Maximum Pool Area	180 m^2 (1900 sq.ft)
Maximum Suction Power	22700 LPH
Filter Basket Capacity	3.5 L
Charger Model	EU: GC44-252150-2C / CH: GC44-252150-2C / AU: GC44-252150-4C
Battery Type	Lithium-ion battery
Capacity	7800 mAh*
Run Time	4 hrs*
Charging Time	5-6 hrs
Charge Temperature	5°C~53°C (±2°C)
Charger Voltage	24.9Vdc
Charger Input	100~240Vac
Charger Output	24.9V ⎓ 1.5A
Operation Frequency	50hz or 60Hz
Storage Temperature	-20° C~70° C (-4°F~158°F)

Standards	Frequency Band
Bluetooth	2400~2483.5 MHz
WiFi (20MHz)	2400~2483.5 MHz

Note:

* 7,800 mAh refers to the maximum nominal capacity measured using the standard charge/discharge method. The data is based on our in-house lab testing, actual performance may vary depending on environmental conditions and battery health.
* The robot delivers up to 4 hours of runtime when operating in pool floor cleaning mode at standard suction power.
* The specifications are subject to change as we continually improve the product. For the latest information, please visit our website at https://www.mova.tech.
* The above statistics are from MOVA Laboratory and may vary depending on the operating conditions.

MOVA

Manufacturer: Wavefuture Robotics Technology (Suzhou) Co., Ltd.

Address: 1/F, Building B, No. 7 Qian Zhu Road, Taihu Street, Wuzhong District, Suzhou, Jiangsu Province, P.R.China

MADE IN CHINA